FLAMESTOP 70 LITRE AFFF MOBILE EXTINGUISHER

TECHNICAL DATA SHEET

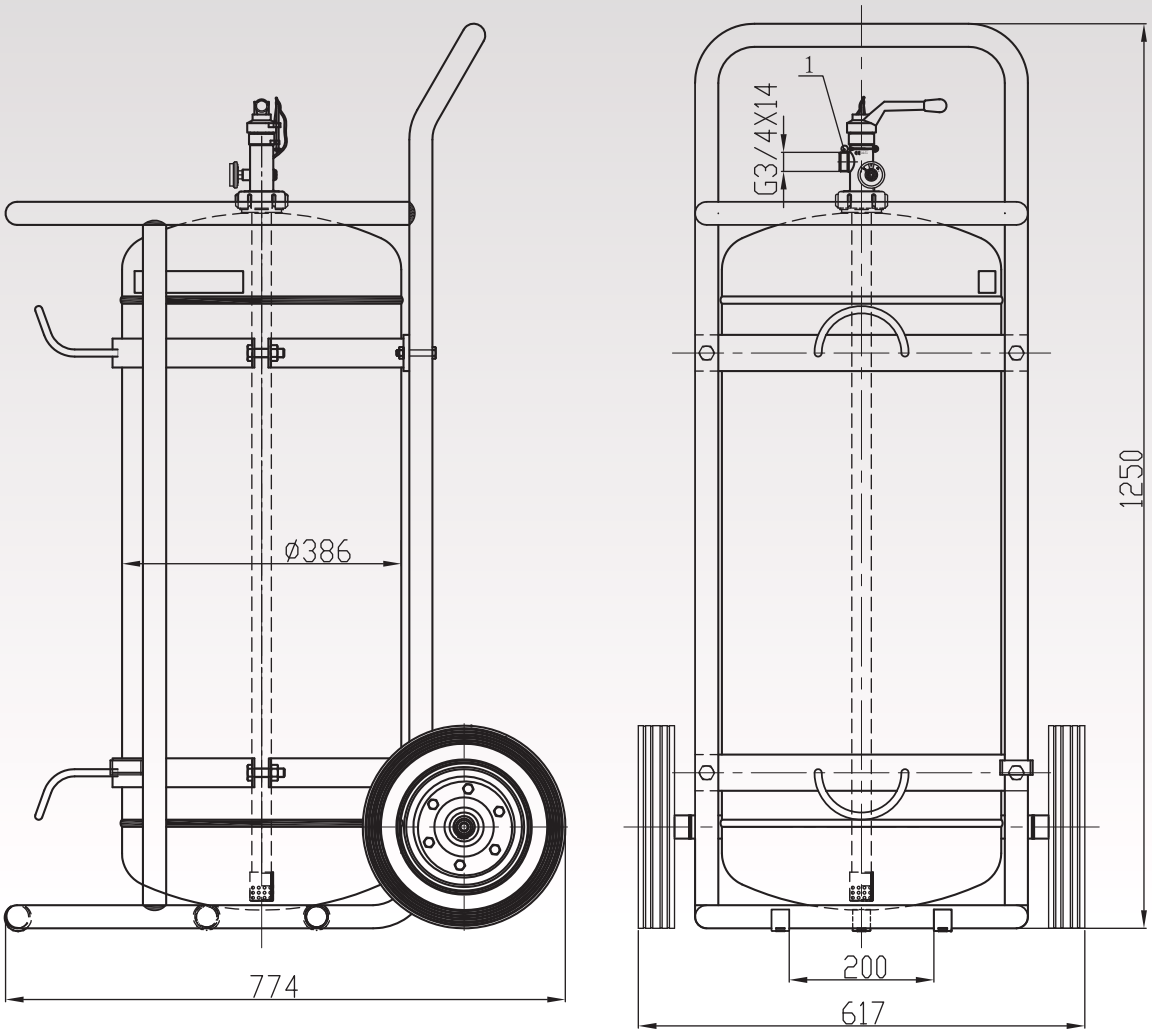

Part Number	M70LAFFF
Agent Capacity	70Lt
Agent Type	AFFF Concentrate C6
Cylinder Construction	Stainless Steel
Cylinder Finish	Powder Coated Red
Dimensions	W617 x D774 x H1250mm
Fire Ratings	9L of extinguishant has 3A:30B
Valve Finish	Nickel Coated Brass
Valve Stem	Brass

© Copyright Flamestop Australia Pty Ltd. All Rights Reserved.